INSTALLATION
AND
USER'S GUIDE

FILTRATION
BLOCKS
Infinity (M)

25 m^3/hour and 20/50 m^3/hour

Equipment of high-alloy steel

for cleaning and filtering water
in the pool

TABLE OF CONTENTS

	Page
APPLICATION	**4**
SHORT IMPORTANT INFORMATION	**4**
DISPOSAL of PACKAGING	**4**
1 – INTRODUCTION TO THE FILTRATION BLOCKS INFINITY (M)	
COMPLETE SET	**5-7**
The general scheme	**5**
INFINITY without heating	**6**
INFINITY + heat exchanger with electronic thermostat	**7**
2 - DIMENSIONS OF EQUIPMENT	**8**
3 - INSTALLATION AND CONNECTION	**9-10**
Ventilation	**9**
Grounding	**9**
Connecting to water supply network	**10**
Connection to drainage system	**10**
4 - SAFETY AND WARNINGS	**11**
Electrical safety	**11**
Electrical cables	**11**
Differential switch	**11**
Other security measures	**11**
5 – ELECTRICAL CONNECTIONS	**12-15**
Electrical control panel	**12**
Wiring diagram of the electrical control panel	**13**
Connecting boxes	**14**
Electrical wiring diagram of heat exchanger	**15**
Hydraulic wiring diagram of heat exchanger	**15**
Table of circulation pumps for heat exchanger	**15**
6 – PUTTING INTO OPERATION	**16**
Filling of swimming pool	**16**
Adjusting the device of automatic water adding	**16**
Initial start-up	**16**
Timer setting for electrical control panel	**16**
7 – FILTRATION MEMBRANE	**17**
Replacement and cleaning	**17**
8 - VACUUM CLEANER CONNECTION AND OPERATION	**18**
9 – REPLACING THE BULB IN SPOTLIGHT	**18**
10 – DISINFECTION OF SYSTEM	**19**
Parameters of a weekly chlorination	**19**
pH	**19**
11 – CARE PRODUCT	**20**
12 – MALFUNCTIONS	**20**
13 - MAINTENANCE OF EQUIPMENT IN THE WINTER	**21**
14 – TECHNICAL SUPPORT CENTER	**21**
CERTIFICATE OF WARRANTY	**23**
WARRANTY CONDITIONS	24

APPLICATION

Congratulations on the purchase of modern high-quality products. Filtering block Infinity is designed for cleaning and filtering water in the pools of all types. The combination of efficiency and a more simplified operation will bring you satisfaction. Please carefully read this guide for a secure connection, effective operation and proper maintenance of the product. Keep the user guide for subsequent use or for next owner. Serial number of the filtration unit is shown below. This will help get more detailed answers to your questions at the center of technical support.

№ _____.

The guide is structured in such a way that you step by step to carry out the necessary work. The manual contains instructions for connection, operation and maintenance of this product. To facilitate access to information manual provided with the content. Follow the advice and guidance contained in this user guide, and VSV Aqua Group products will make you happy for a long time.

SHORT IMPORTANT INFORMATION

Do not use Filtering block Infinity (M):
- without grounding;
- in pools with sea water;
- in pools with ozone or electrolysis system.

To avoid corrosion it is important to follow these instructions:

1. The pool must maintain required pH, chlorine, salts, etc. The pH in the pool should be in the range from 7,2 to 7,6. If the level of pH above 7,6, then in water will precipitate calcium salts, which will fall on the stainless steel equipment. If the pH is below 7,0, the water is highly corrosive, which also adversely affects the status of stainless steel products. The content of free chlorine in the pool water should not be higher than 0,5 mg / liter. Excess chlorine contributes to the formation of rust.
2. Adding to the pool of chemicals should be performed at a sufficient distance from parts made from stainless steel to avoid getting chemicals on stainless steel equipment. Otherwise, on the surface of stainless steel can form rust and turbidity.
3. Spread the chemicals in various fields of the basin. Do not add the chemical in one place, it could lead to the formation of regions with high acidity, which can lead to corrosion of the equipment pool. Always use floating dispensers when you adding chemicals. A complete description, see Section 10 "Disinfection System."
4. Check the filter membrane. Keep your pool clean, do not allow accumulation of leaves, grass, etc. Their decay can lead to increased pH-factor.
5. Do not allow that on the surface of stainless steel remained dust, cement, dirt during the construction of a swimming pool. Avoid contact of stainless steel with other materials (especially iron), as this may lead to the formation of yellow pigments, especially at the welded joints in filtration unit.
6. All the polished surface of the product require periodic care by special means (not use abrasive cleansers). In the indoor pool concentration of corrosive vapors resulting from the use of chemicals, higher than outdoor pools, so the indoor pool cleaning parts from stainless steel should be performed more frequently than in the open.
7. Stainless steel parts should not be stored and transported close to the chemical reagents and dosing devices.

In case of violation of these requirements, the manufacturer is not liable for the loss of the appearance of products, qualities and properties needed for full operation.

DISPOSAL of PACKAGING

The packaging material was used to protect equipment during transportation. The packaging recyclable and does not harm the environment. Please make a contribution to environmental protection and return the packaging for environmental disposal.

Warning! Do not let children play with the packaging. They can choke locked in a box or entangled in the packaging film!

The manufacturer reserves the right to make changes without notice in design and component products.

1 – INTRODUCTION TO THE FILTRATION BLOCKS INFINITY (M) COMPLETE SET

This guide is valid for several models of filtration blocks Infinity. Therefore, can be some differences in the drawings.

The general scheme
25 m^3/hour and 20/50 m^3/hour

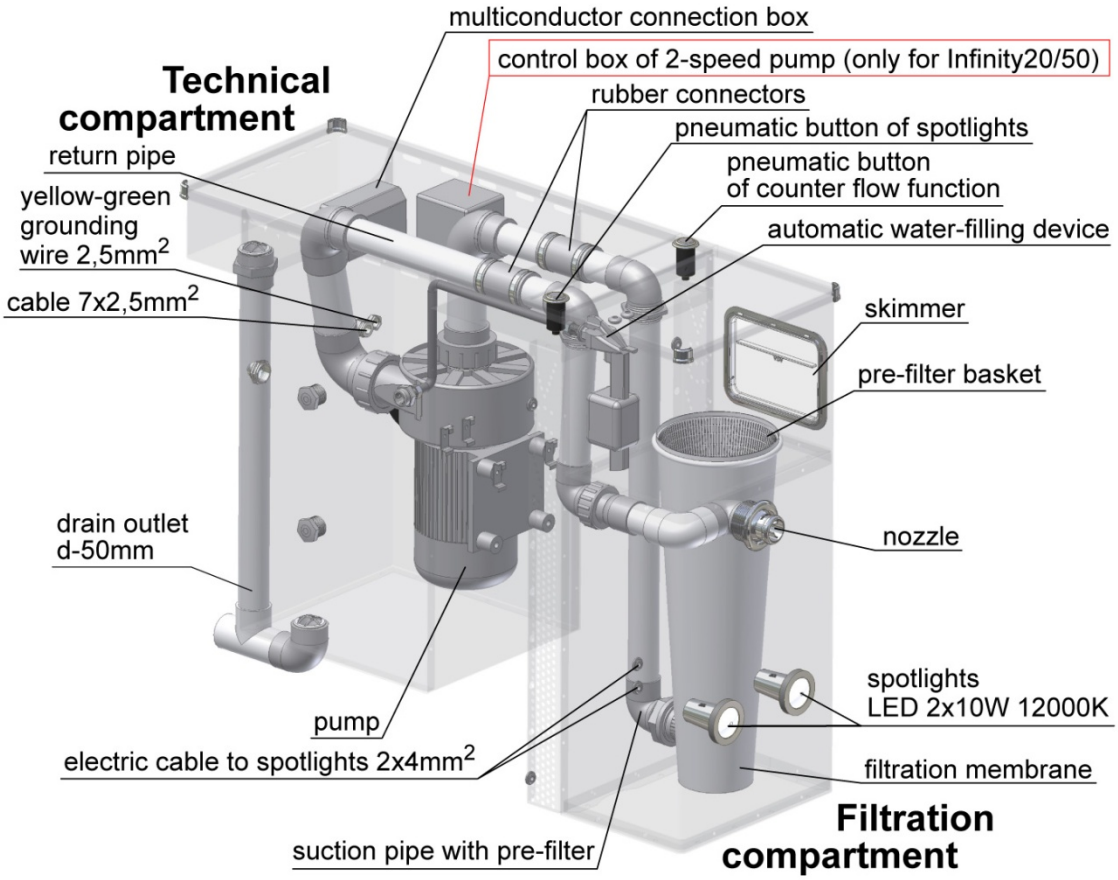

- **The filtering part** includes pre-filter basket + cover for connection with water vacuum cleaner, standard filter membranes (6-15 microns), front skimmer, nozzle, LED lights 2x10W 12000K, pneumatic switch button of spotlights, pneumatic button for counter flow function, the device of automatic water adding, the suction pipe with pre-filter.

- **Technical part depending on the model** includes one-speed pump 220V (in model Infinity 25) or two-speed pump 220V with a control unit for the function of counter flow (in model Infinity 20/50), the transformer spotlights, drain outlet, connection box, connecting pipes, grounding bolt.

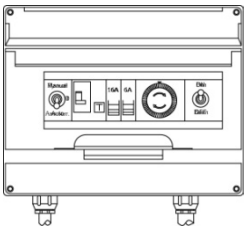

- **Electrical control panel** includes a timer, a differential switch (breaker), fuses, mode selector switch, LED lights switch.

INFINITY without heating

BLOCK Infinity (M) 25 m^3/ hour

Total assigned power of **0,82 kW** (with spotlights **2x10W**):
- one-speed pump **0,8kW (50Hz)**
- performance (capacity) – **25 m^3/hour**
- height **(H) max. 14 m**

BLOCK Infinity (M) 20/50 m^3/ hour

Total assigned power of **1,62kW** (with spotlights **2x10W**):
- two-speed pump **0,3/1,6kW (50Hz)** *
- performance (capacity) – **20/50 m^3/hour**
- height **(H) max. 19 m**

* The counter flow

The counter flow activated by pressing a pneumatic button on the instrument panel in the filtering part (only in models with two-speed pump Infinity 20/50).
WARNING! Do not leave the filtration turned on for a long time in a counter-flow mode, as this function is not designed for continuous operation.

The technical part without heat exchanger / electric heater

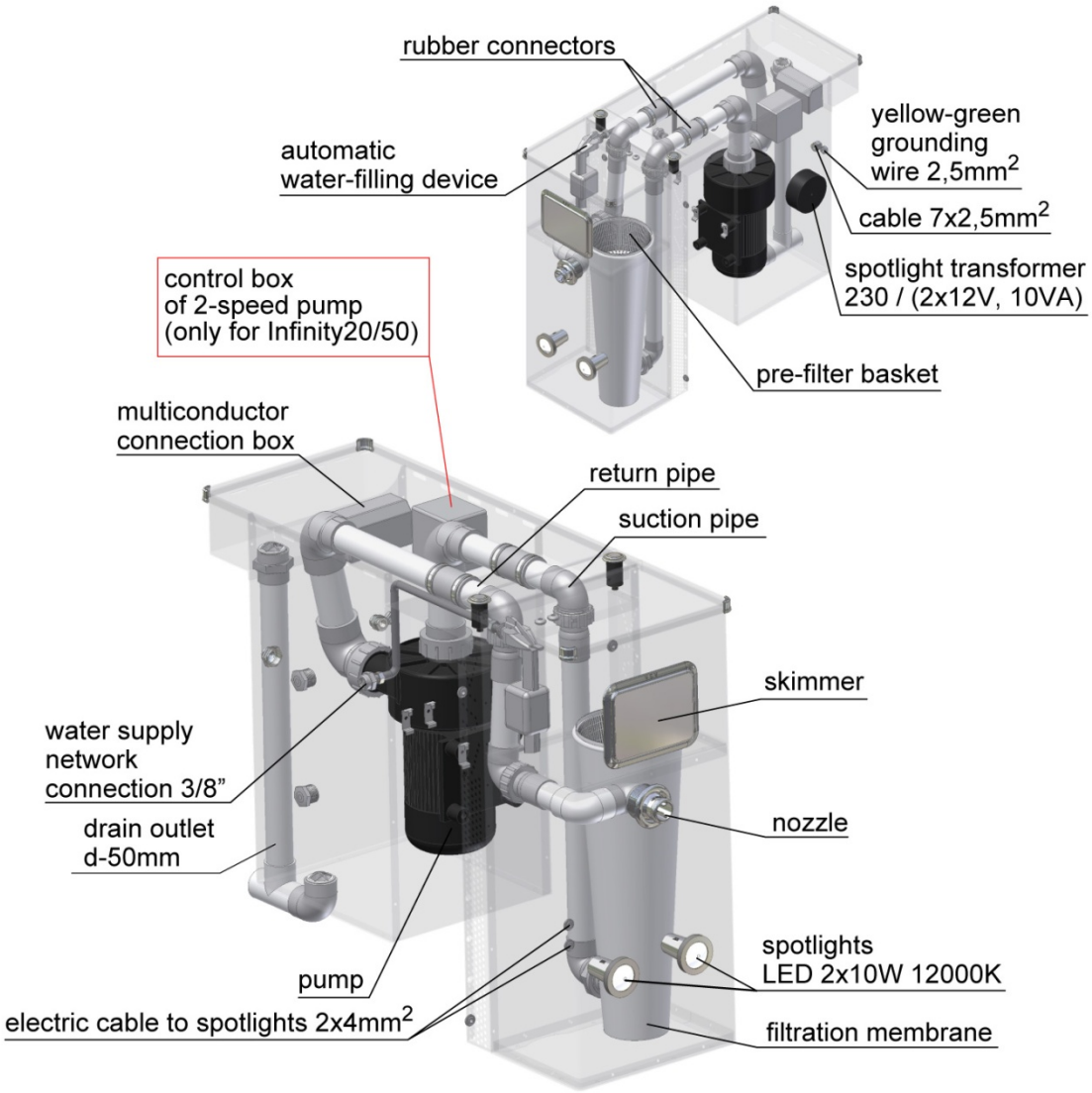

INFINITY + heat exchanger with electronic thermostat

(for use with boilers)

Heat transfer 15 kW min. - 70 kW max.

BLOCK Infinity (M) 25 m^3/ hour + heat exchanger

Total assigned power of **0,823 kW** (with spotlights **2x10W**):
- one-speed pump **0,8kW (50Hz)**
- performance (capacity) – **25 m^3/hour**
- height **(H) max. 14 m**

BLOCK Infinity (M) 20/50 m^3/ hour + heat exchanger

Total assigned power of **1,623kW** (with spotlights **2x10W**):
- two-speed pump **0,3/1,6kW (50Hz)**
- performance (capacity) – **20/50m^3/hour**
- height **(H) max. 19 m**

The technical part with heat exchanger

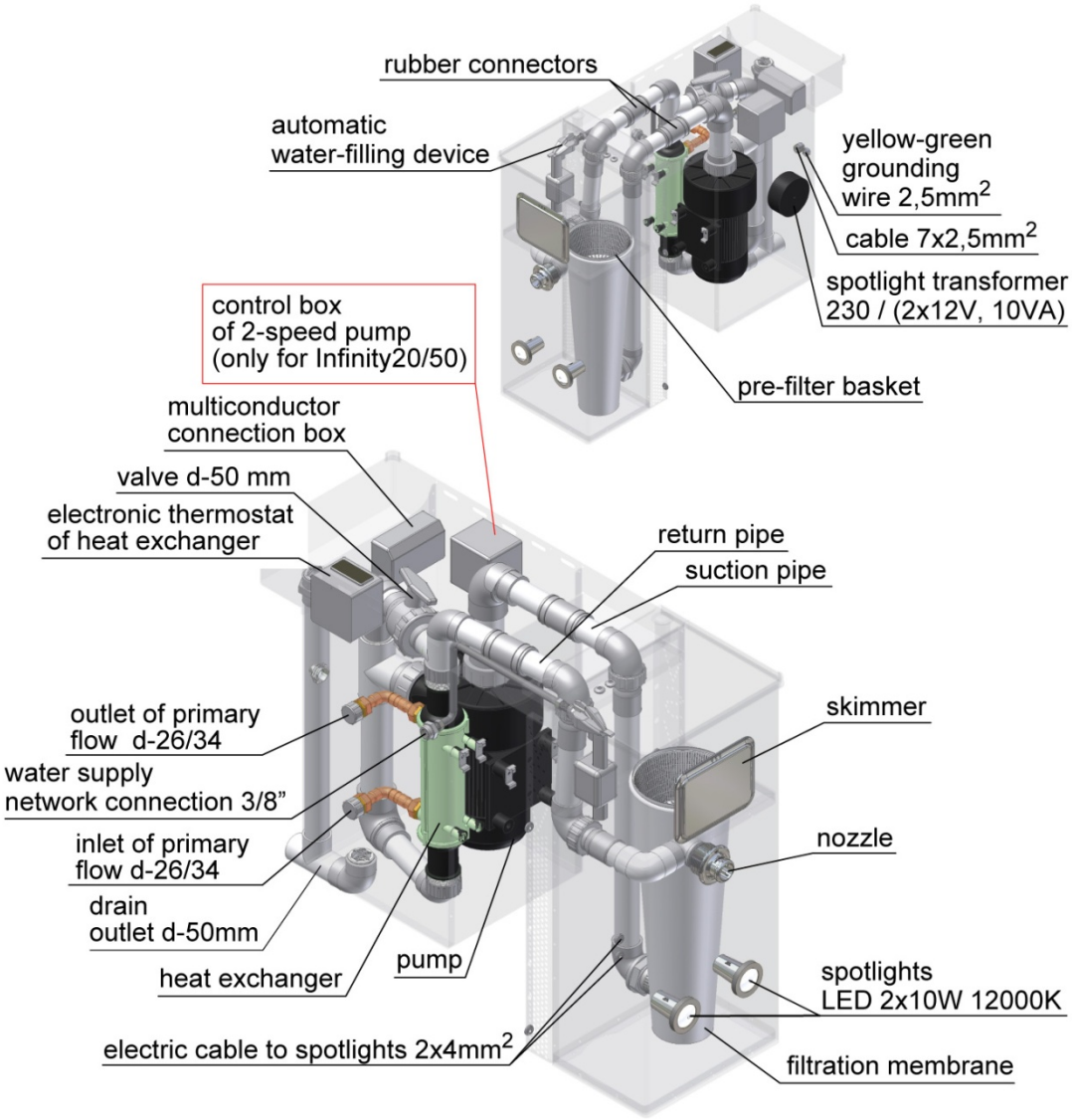

2 - DIMENSIONS OF EQUIPMENT

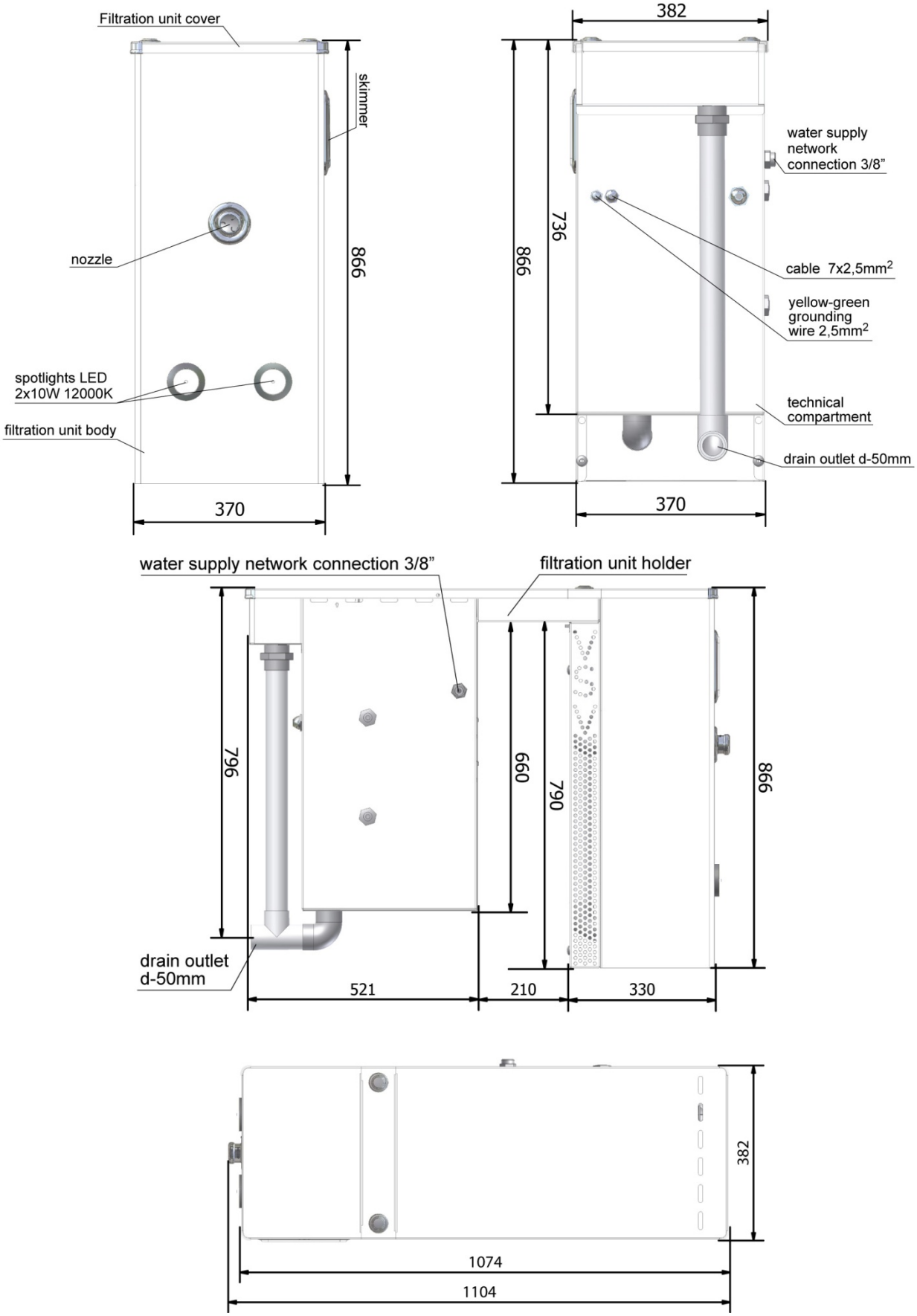

3 - INSTALLATION AND CONNECTION

Place the block on the wall of the pool, as shown below, **taking care** not to damage the waterproofing coating (liner). If necessary, align it with the water level and fasten the block mounting bolts in a projected place.

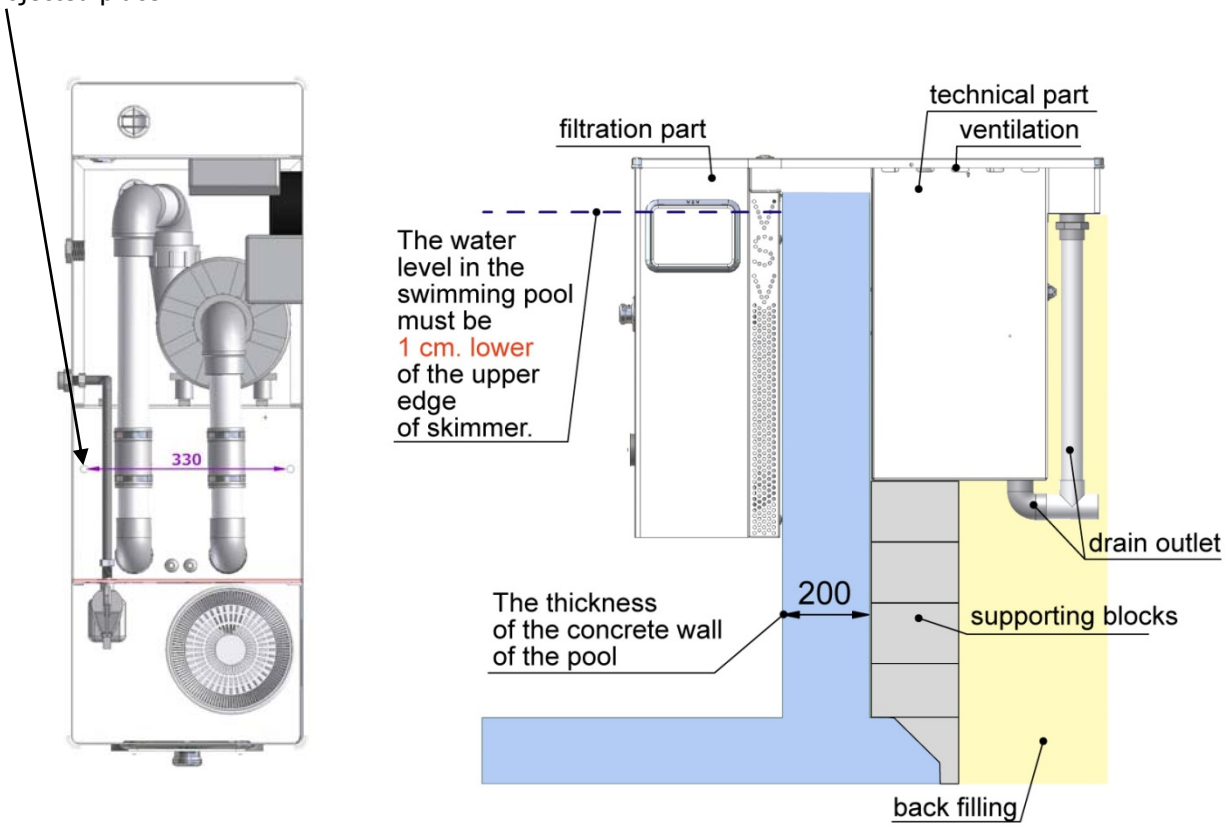

VENTILATION

Warning! Never cover the ventilation holes in the lid of the technical compartment. Otherwise the equipment will have to work with increased productivity, which increases power consumption and can cause overheating and damage of motor.

Grounding

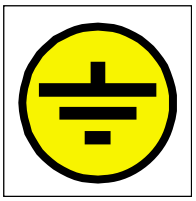

Perform the grounding of the filtration equipment according to the norms of your country. Connect the filtration equipment to the ground by flexible copper wire cross section of 10 mm^2.

WARNING! Absence of grounding life-threatening.

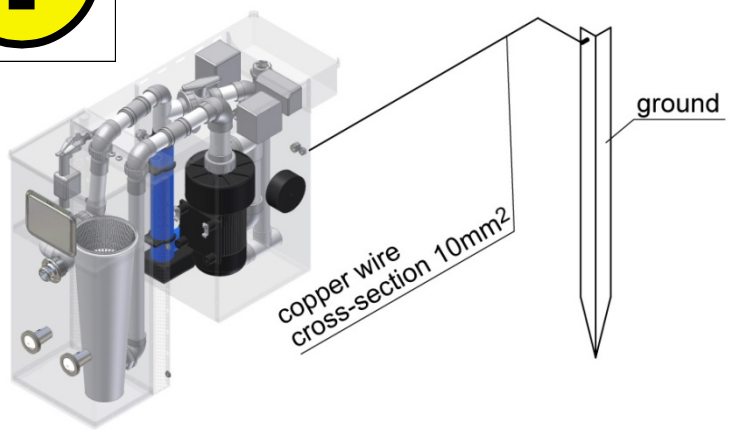

If your filtration equipment is not connected to ground or incorrectly grounded, there is the risk of corrosion because of the potential difference.

The manufacturer cannot be held responsible for any damages arising from absence of grounding or an incorrectly grounding.

Connecting to water supply network

Connecting to the water supply network must necessarily be conducted before the electrical connection by a competent person in accordance with local Requirements developed by the company responsible for water supply in your area.

Adding of water

Bring the pipe to filtration unit and connect it to the inlet (thread 3 / 8 inches), provide a tight seal. Filtration unit must be connected to the water supply of cold water with a hydraulic pressure not exceeding 4.5 Bar, because the device of automatic water adding is designed to pressure 4.5 Bar (max). Adjust the screw after filling the pool. Water must be 1 cm lower of the upper edge of skimmer (see pict.).

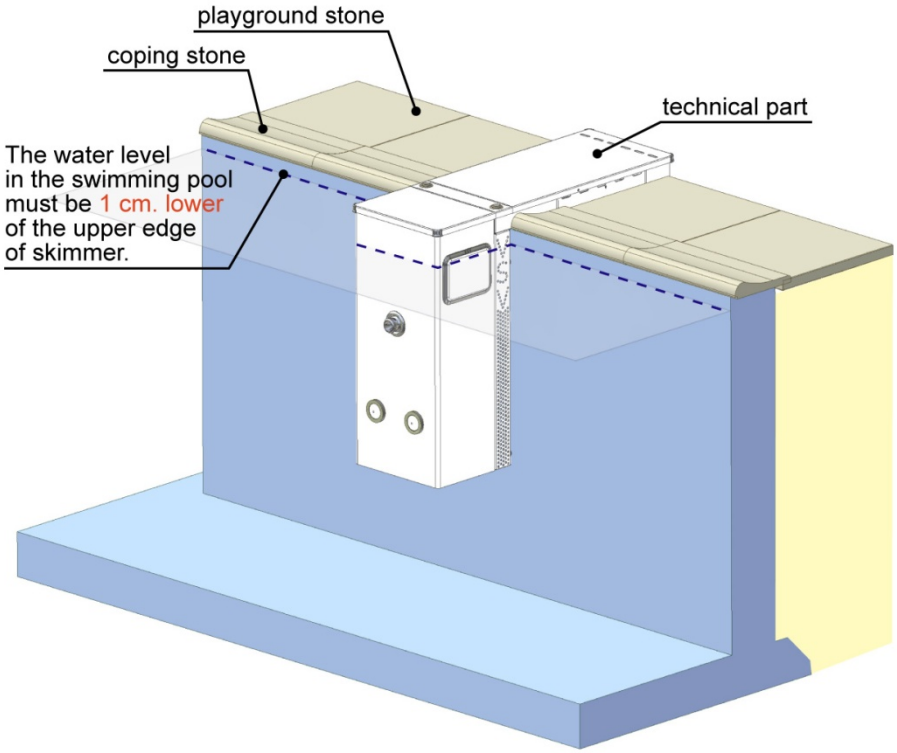

Connection to drainage system

DRAINAGE

With the help of tubes 50 mm in diameter, connect the drainage pipe of filter equipment with a drainage system. Create a slope pipelines to avoid raising the water level inside the technical part. **WARNING!** Follow the connection so that water from other drainage systems does not leak to drainage system of filtration unit.

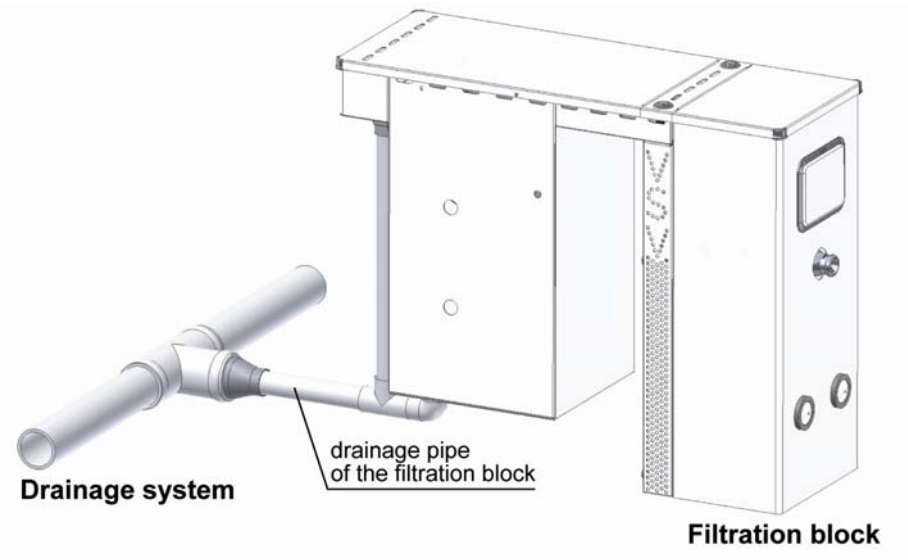

4 - SAFETY AND WARNINGS

Before introducing the equipment in operation carefully read the instructions on installation and operation! Make sure you understand all instructions. Do not take any action not described in this guide, as this could lead to a situation dangerous to humans and / or equipment.

ELECTRICAL SAFETY

To avoid danger of injury or electric shock when connecting and using your equipment, always follow safety standards in your country and observe the rules of connectivity, developed by local companies for electricity.

All electrical connections must be performed by a qualified person in compliance with the enclosed instructions and wiring diagrams. Connections shall comply with electrical codes in your country. Electrical control panel for the filter should be installed no closer than 3.5 meters from the pool. All connections in the electrical control panel should be tightened.

At the beginning of the power supply circuit electrical control panel should be fuse 16 A (before differential protection).

An all pole disconnection should be provided in the fixed wiring.

ELECTRICAL CABLES

Perform the electrical connection with a copper cable 3 x 2,5 mm^2 (for cable lengths up to 20m) by acceding to the upper terminals of the differential switch in the electrical control panel of filtration equipment with the correct polarity.

It is necessary to laid cable in a protective tube. If the cable is not protected you must install warning tape on top of the cable. Under roads cables are laid at a depth of not less than one meter. In all other cases, the depth of the cable - 0.6 m

WARNING! The technical part with electrical equipment should be securely closed with a cover and fixed with screws. Disconnect power supply before performing any operations in the technical part of the equipment. **Filtration unit must be connected to ground (see section "Grounding").** Please check the rules of your country.

DIFFERENTIAL SWITCH

Attention! Filtration unit is connected to power supply only through the differential switch 30mA. Your electrical control panel has a differential switch, which provides special protection against electric shock and disables the filtration unit in the event of an incident.
IMPORTANT NOTICE! You should check the differential switch at least once a month. To test, press the test button on the differential switch. At the time of triggering of the security mechanism you should hear a click OFF. Then turn ON the differential switch again.

When testing the differential switch must be under tension. If you pressing the test button and differential switch does not turn off, you must disable electricity and contact a qualified electrician.

OTHER SECURITY MEASURES

Filtration equipment is not intended for use by person (including children) with reduced physical, sensory or mental capabilities, unless they have been given supervision or instruction concerning use of the appliance by a person responsible for their safety. Children should be supervised to ensure that they do not play with the equipment.

5 – ELECTRICAL CONNECTIONS
Electrical control panel

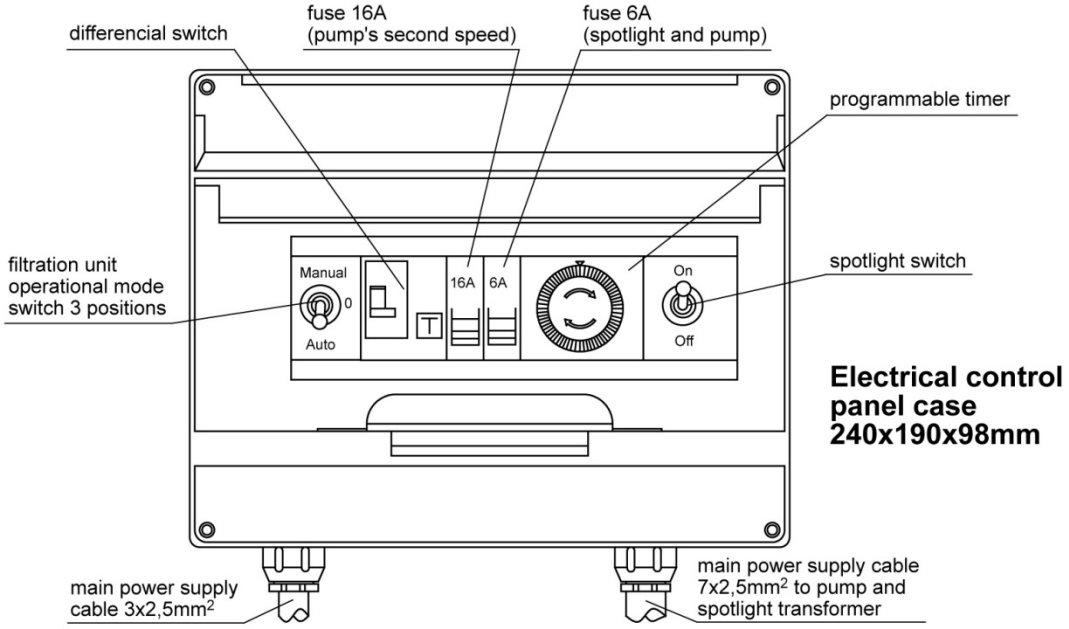

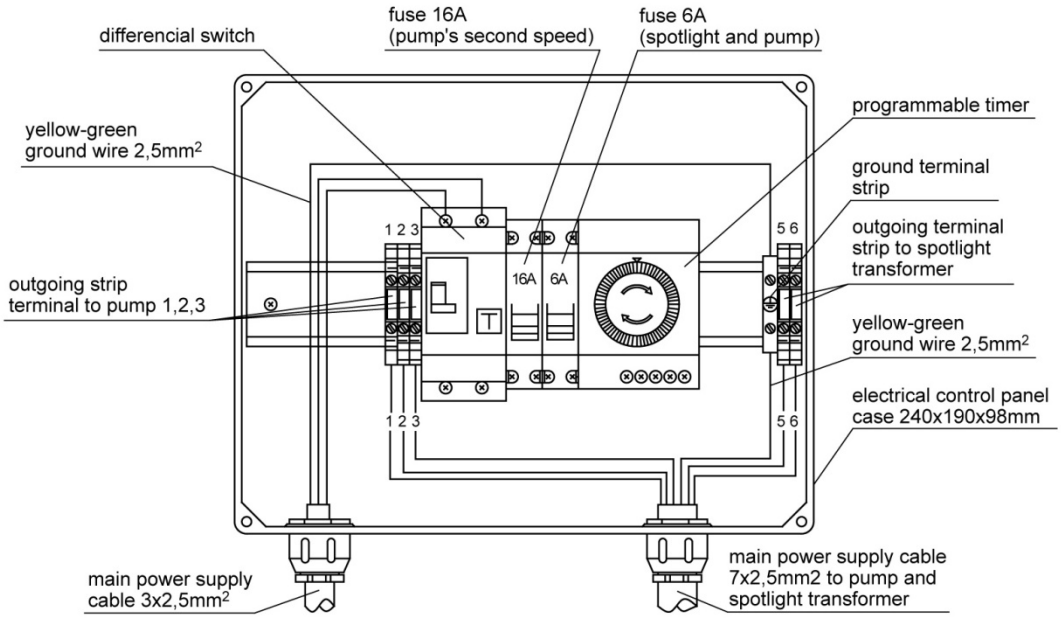

WIRING DIAGRAM OF THE ELECTRICAL CONTROL PANEL

Connection of power supplies is made to the upper terminals of the differential switch, observing polarity. Power supply cable for pump and transformer of spotlight is connected to terminals according marking on the cable wires and according to the attached scheme.

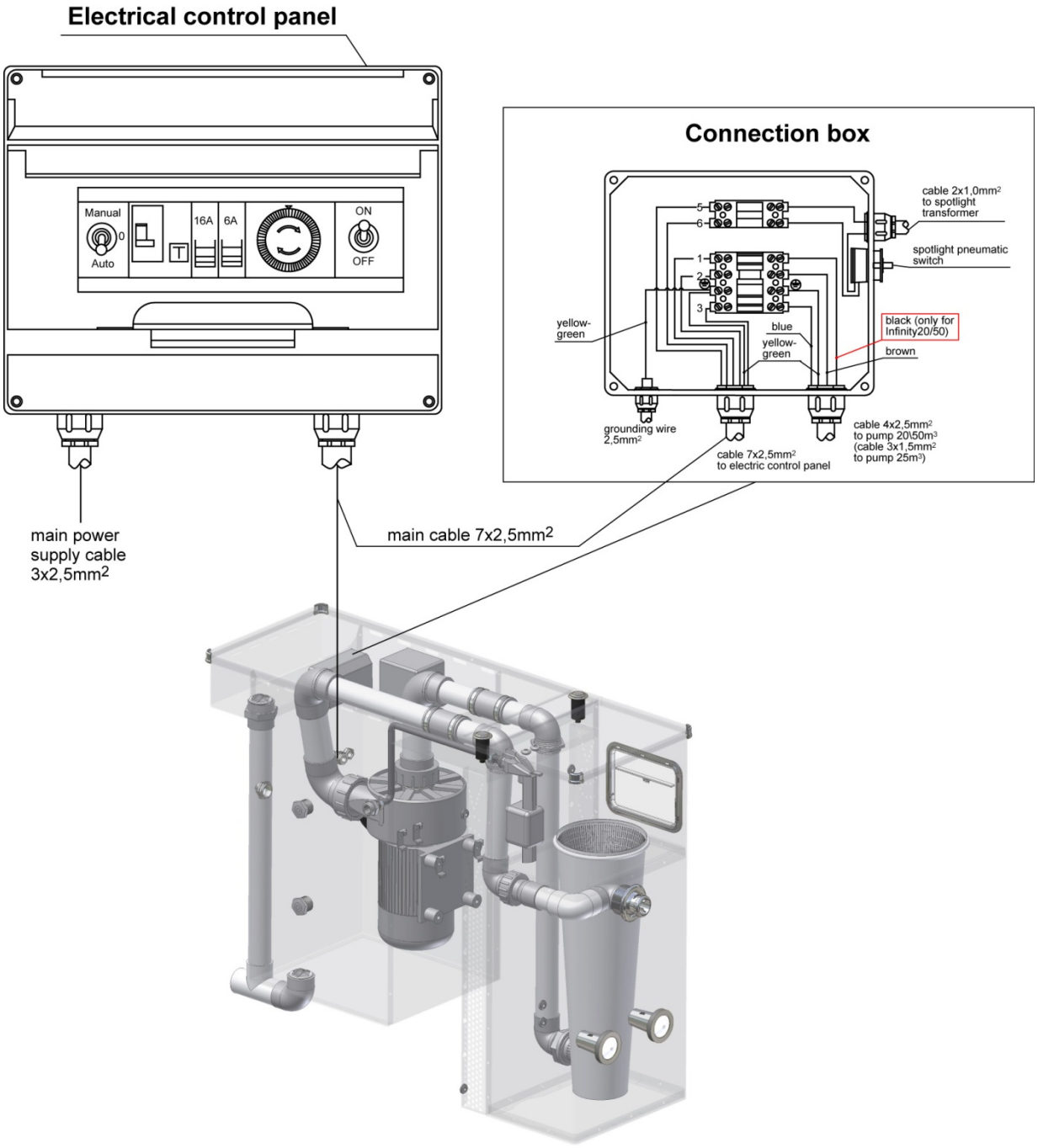

CONNECTING BOXES
of the filtration blocks Infinity (M)

Enter the power supply cable for pump and transformer of spotlight in the technical part through O-ring. Tighten the nut of seal to avoid getting water into the technical part. Enter the cable into the connection box and connect the wires according to the scheme.

Connecting box without water heating

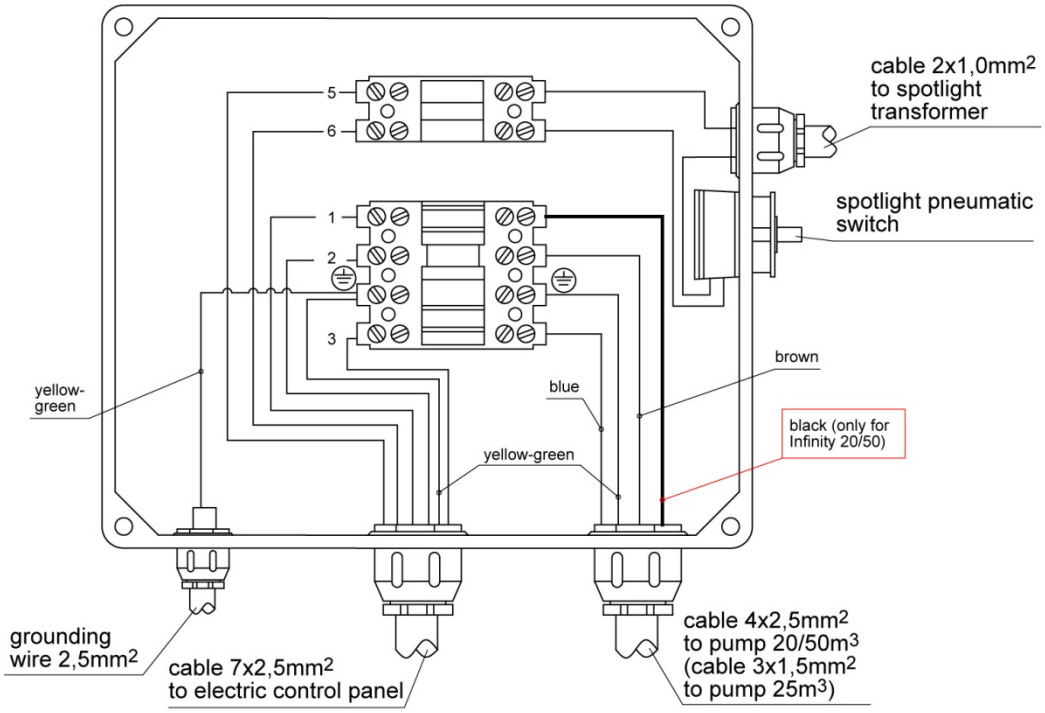

Connecting box with Heat exchanger

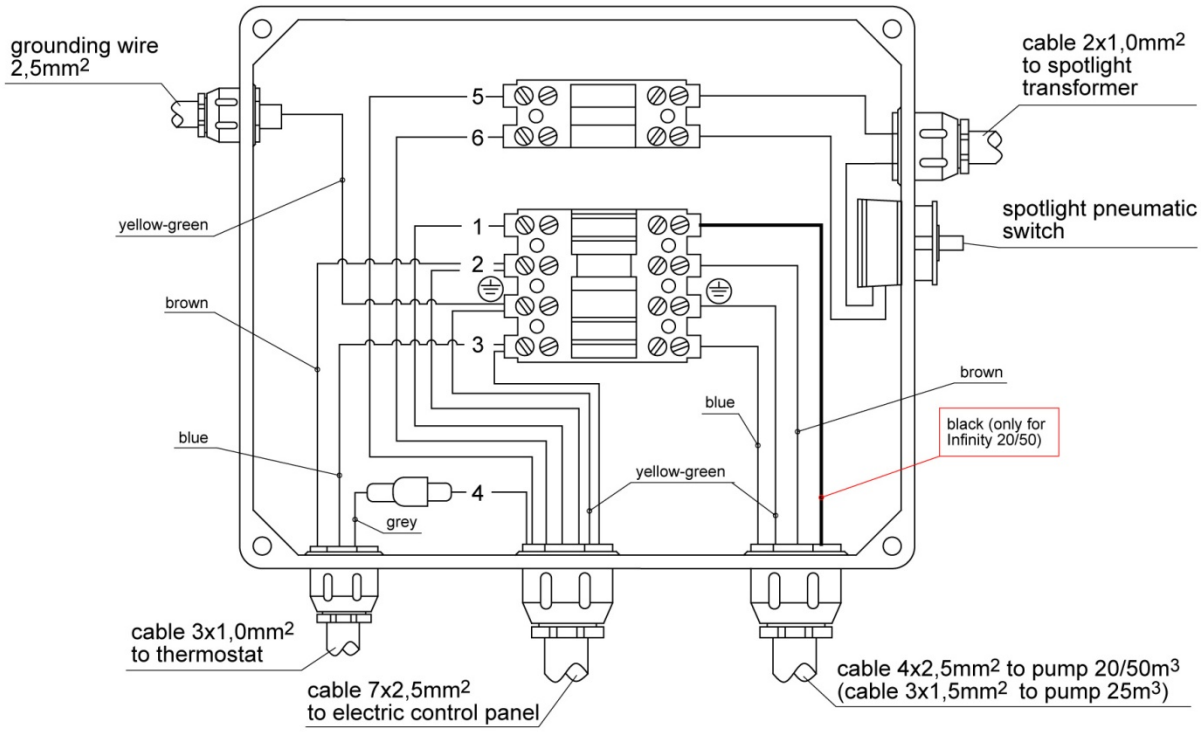

ELECTRICAL WIRING DIAGRAM of HEAT EXCHANGER

Connect the filtration unit with electrical control panel according to this scheme.

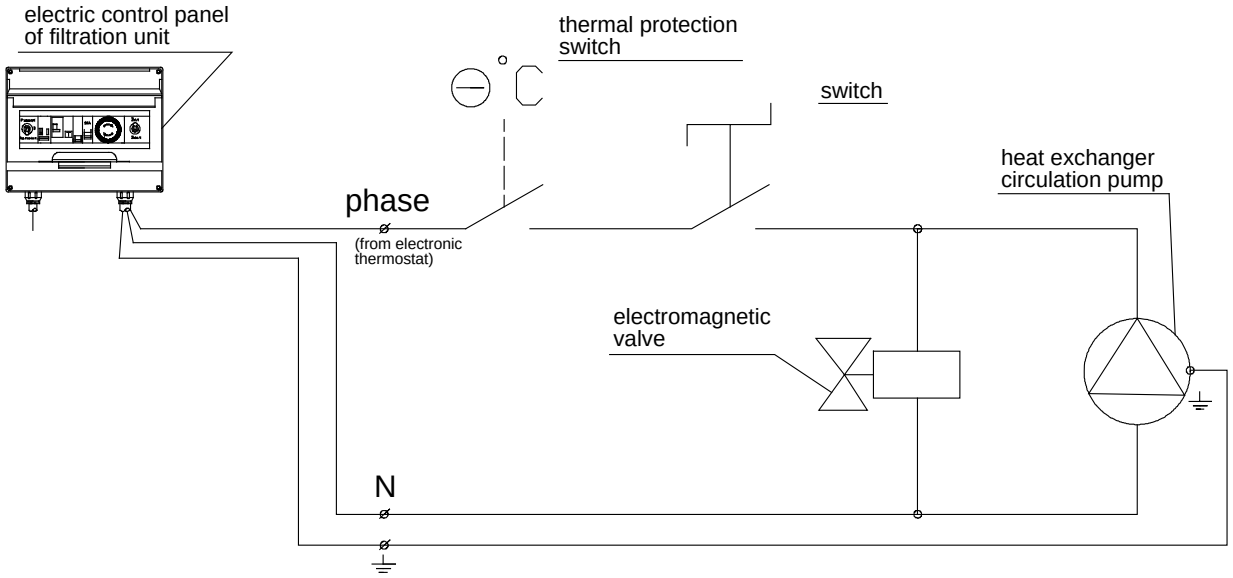

HYDRAULIC WIRING DIAGRAM OF HEAT EXCHANGER

Connect the heat exchanger with gas boiler according to the attached scheme.

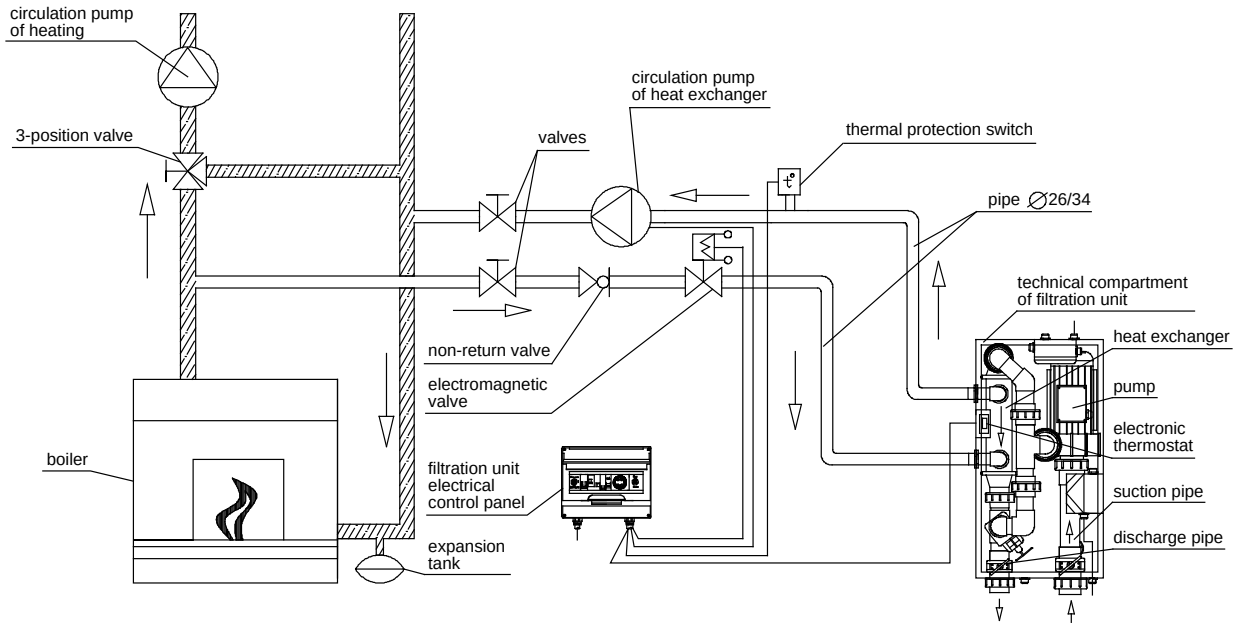

Choose the circulation pump of necessary capacity according table below.

Table of circulation pumps for heat exchanger

Capacity of the circulating pump	Power of the circulating pump
0,72 m^3/h	15 kW
1,44 m^3/h	29 kW
2,16 m^3/h	44 kW
2,88 m^3/h	59 kW

6 – PUTTING INTO OPERATION

FILLING OF SWIMMING POOL

Once again check connection of all pipes (see Section 3. "Installing and Connection") and start to fill the pool by water. Stop filling when the water reaches a level 1 cm below the upper edge of the skimmer (see "Connecting to the water network).

PLEASE OBSERVE THE FOLLOWING REQUIREMENTS AT THE TIME OF FILLING THE POOL:

If the water does not meet the established standards (not clean enough), you can use for cleaning of water the filter bag, which is included in the complete set of filtration unit. To do this, insert the hose into the filter membrane fix the membrane on the hose and start to fill the pool.
At the end of the swimming pool filling, rinse the membrane by water under pressure.

ADJUSTING THE DEVICE OF AUTOMATIC WATER ADDING

To keep water in the pool always at one level (1 cm below the top of skimmer) necessary to adjust the screw of automatic water adding in filtration compartment.

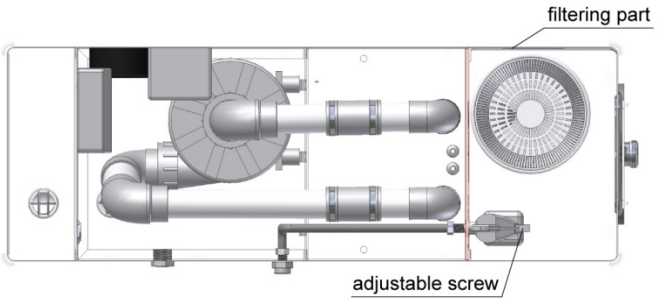

INITIAL START-UP

Following the instructions from Section 4, "Safety and warnings", do the electrical connections.

To remove air from the piping and pump, connect to the water supply flexible hose.
WARNING! Do not put the flexible hose in the discharge nozzle. Enough to keep the hose near the discharge nozzle. Stop filling pipelines by water when the air bubbles will stop. After filling the pipeline, make sure, that no leaks in the joints of pipes. Then fill the sand around the technical part and pipeline.
Insert the filter membrane inside of filtration unit (see Section 7 "Filtration membrane). Turn on filter equipment and start primary cleaning of water in a manual mode. To do this, set the switch on the electrical control panel in "manual ".
After two or three days of filtration unit in a manual mode, turn the switch on the electrical control panel in "automatic mode" and Install on a timer duration cycles of water filtration.

TIMER SETTING

You can use the timer of electrical control panel to set the daily filtration time of your pool.
REMEMBER, the more often filtered swimming pool, the cheaper to maintain it! Adapt the time of filtering to water temperature (time of filtering = temperature of water divided by 2). For example, if the temperature of water in your swimming pool = 24°C, then 24:2=12 hours (time which filtration unit must work).

To set filtration time, it is necessary carefully to pull out the segments. One segment corresponds to 30 minutes. To set timer's clock, it is necessary to rotate dial face clockwise until a set time. It is forbidden to rotate a dial face counter-clockwise, it can damage it.

7 - FILTRATION MEMBRANE

WARNING! Do not operate the filtration unit without filtration membrane as it can break the motor.

In filtration blocks Infinity water is sucked through the skimmer and cleaned through the filter membrane, then clean water flows back into the pool through a nozzle. Before the filtration membranes installed pre-filter basket designed to remove the largest size impurities, for example leaves. The efficiency of your filtration equipment will depend on cleanness of pre-filter baskets and filtration membrane.

WARNING! Insert the filtration membranes into openings of the holding plate inside the filtration unit such a way that the lock ring should remain on the holding plate. Install the pre-filter baskets and switch on filtration unit

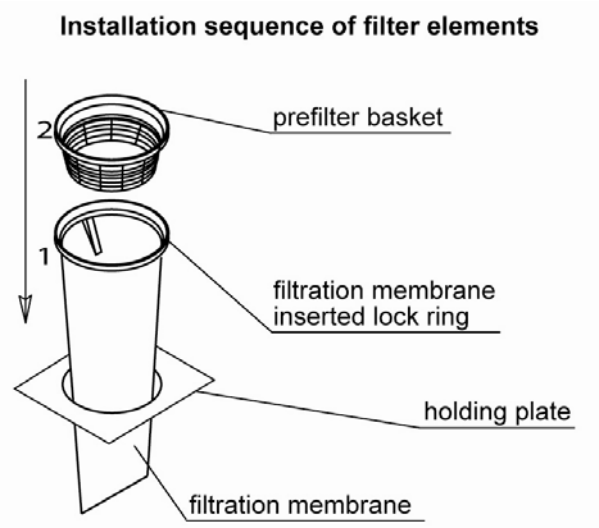

REPLACEMENT AND CLEANING

WARNING! Replacing contaminated filter membranes can be performed only after turning off the filtration unit.

Switch off filtration equipment from power supply. Remove the pre-filter basket and rinse with water. Then remove the filtration membrane and rinse with water under pressure. You can washed filter bag in automatic washing machine at a temperature not exceeding 30^0C, but in any case after being washed from a hose. Do not use any detergents. It is necessary clean the filter membranes not less than once a week, or when contaminated.
Optimum service life of the membrane is two years. Do not use membrane after the expiration date. The manufacturer guarantees the quality of water treatment only with membrane VSV.

WARNING! If near your pool there are leafy trees, please every time check pre-filter basket and from plugging with fallen leaves. This impairs the efficiency of the filtration unit and may damage the motor. Pure pre-filter basket improves the efficiency of the filtration unit.

8 - VACUUM CLEANER CONNECTION AND OPERATION

Put down in the swimming pool a hose of vacuum cleaner. Keep a hose near the nozzle and fill with water. Take the cover from vacuum-cleaner and insert on a pre-filter basket. Connect hose to the cover with hole and start cleaning of swimming pool.

CAUTION! It is forbidden to use function of counter-flow for cleaning!

WARNING! Vacuum cleaner hose must be tightly connected to the tip of hose to avoid air suction and getting into pump.

WARNING! Do not connect the vacuum cleaner through the skimmer, it can damage the skimmer!

When membrane during pool cleaning dirty, turn off the filtering from power supply, clean or replace the filter membrane.
After cleaning swimming pool, again turn off filtration unit, remove the cover from the basket, replace the dirty membrane on clean.
Then turn on filtering.

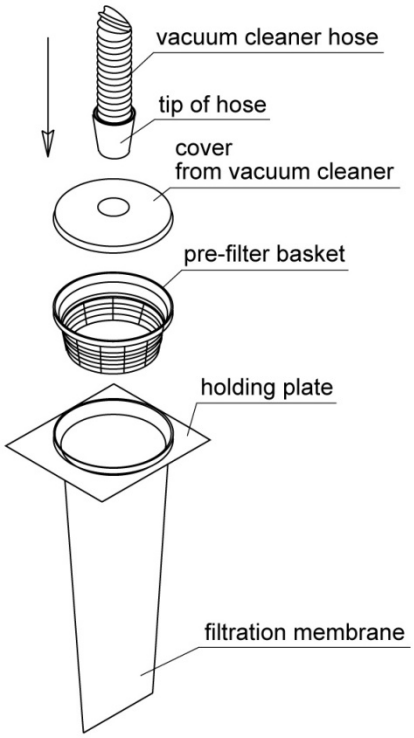

9 - REPLACING THE BULB IN SPOTLIGHT

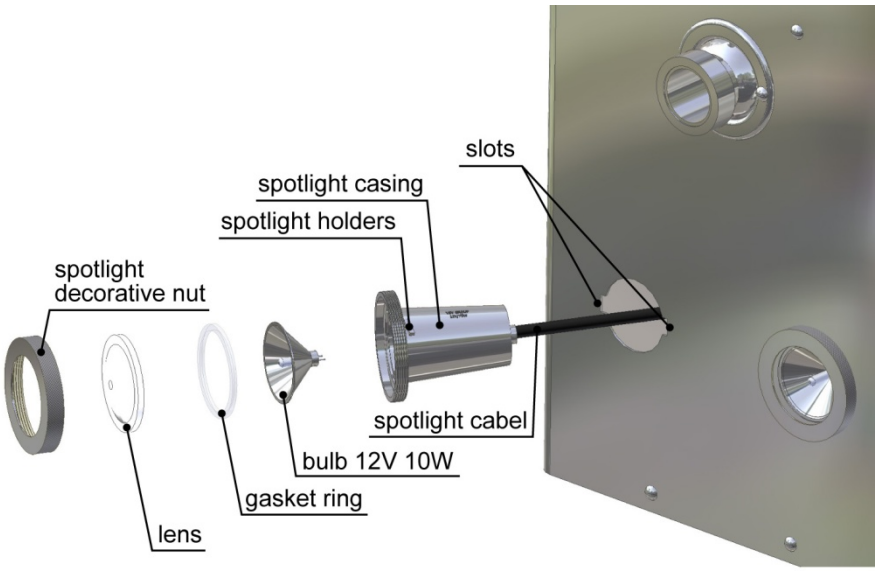

Disconnect the power supply of filtration unit. Rotate the spotlight in a clockwise direction until the latches spotlight will not fall into the grooves on the front of the filter. Pull out the spotlight from the water, slowly pull surplus of cable
Take a spotlight's cup and unscrew counterclockwise decorative nut of spotlight. Remove a glass and take out a bulb. Replace by new bulb. Then assemble the spotlight in the return sequence. Densely tighten a decorative nut of spotlight. Insert a spotlight on the place of braces in the grooves, and then rotate in clockwise direction to lock it in place on the front of the filter.
ATTENTION! Spotlight works only with transformer 230 / (2x12V, 10VA).

10 – DISINFECTION OF SYSTEM

WARNING! Excess of chlorine can cause a corrosion of the system.
Make sure that the chlorine level was within the limits recommended by the manufacturer of chemicals, and are assigned to the type of pool, for example, private, hotel, school or municipality, but under no circumstances it should not be above 0.5 mg/liter.

- Put the chlorine tablets in the chlorinator (floating dispenser).
- Keep all chemicals out of reach of children, away from sunlight, in well-ventilated area.
- Never add to the pool at the same time two different products.

Chlorine is the most effective way of disinfecting the pool water.

Weekly chlorination
For weekly chlorination use a slow-acting product. For example, 200 gram tablets dissolve slowly and continuously disinfect the pool water. Normally one tablet is enough for 20 m^3 of water for one week.

Parameters of a weekly chlorination
Required dose of chlorine depends on the frequency of bathing, water temperature, sunlight, and the size of the pool. To measure the amount of chlorine you must use the test kits.

When pH adjusted

Water volume	Slow chlorination
40 m^3	2 tablets
50 m^3	2 tablets
60 m^3	3 tablets
70 m^3	3 tablets
80 m^3	4 tablets
90 m^3	4 tablets
100 m^3	5 tablets

WARNING! When using chemicals from different manufacturers, the dosage may to change in depending on the concentration. Attentively read the instructions on the labels of chemicals.

Summary: *water in the pool always been a clean, you need every week to check the pH and chlorine in the pool and when need to make balance*

pH
The pH is a measure of the acidity of the water. The pH scale goes from 0 to 14, where pH 7 is neutral. If the pH is above 7, the water is basic; if it is below 7 the water is acid. The optimum pH for pool water is 7.4, since this is the same as the pH in human eyes and mucous membranes. A pH of 7.4 also gives good chlorine disinfection.

A low pH gives:
- aggressive water, which damages the mechanical components of the pool
- irritations of the eyes and mucous membranes
- damage to the pool liner

A high pH gives:
- poorer chlorine disinfection
- skin irritation
- lime precipitation
- cloudiness

The guideline pH figure is 7.2 – 7.6.

11 - CARE PRODUCT

WARNING! Do not use abrasive cleaners!

Filtration systems for swimming pools are made of high-alloy stainless steel. However, over time, depending on water quality and climatic conditions on the surface of the product may be formed of pollution in the form of lime or fatty deposits.

Information about care product designed specifically for cleaning steel products, you can get online support center.

12 - MALFUNCTIONS

Sometimes the cause of the problem can be easily eliminated. Therefore, before contacting the Service, check whether you can solve the problem yourself, as recommended below:

№	MALFUNCTION	POSSIBLE REASON	ELIMINATION
1.	Filtration unit does not work in a manual and automatic mode	Triggering of differential switch in the electrical control panel	Switch on the differential switch
		Power supply is switched off	Check up, whether there is power in electricity network
2.	Filtration unit does not work in a filtration mode	Triggering of safety fuse 6A in the electrical control panel	Replace safety fuse 6A
3.	Filtration unit does not work in counter swimming mode	Pneumatic button's pipeline is disconnected from the pneumatic button or from the pneumatic switch	Connect the pneumatic pipeline
		Triggering of a safety fuse 16A in the electrical control panel of filtration unit	Check a safety fuse 16A
		Triggering of heat protection in the pump's electric motor	Switch off a filtration unit for 15 minutes and switch on again.
4.	Filtration unit spotlight does not shine (filtration unit is working)	Pneumatic button's pipeline is disconnected from the pneumatic button or from the pneumatic switch	Connect the pneumatic pipeline
		Triggering of protection fuse in spotlight transformer	Call service department
		Spotlight bulb burned out	Replace the bulb as written in section 9 on page 18
5.	Filtration unit is working, but skimmer is closed	Filtration membranes are dirty	Replace or clean filtration membranes
		Prefilter baskets are dirty	Clean prefilter baskets
6.	In the water from discharge nozzle there are many air bubbles, the water flow is lower (acceptable operational mode)	Too much aeration in the water	Switch off filtration unit for 30 seconds and then switch on again
7.	The water vacuum cleaner does not collect a dirty from a bottom of pool	Filtration membranes are dirty	Replace or clean filtration membranes
	The water vacuum cleaner does not collect a dirt from a bottom of pool (filtration membranes are clean)	Mouthpiece of vacuum cleaning hose is badly connected with hose	Take out the vacuum-cleaning hose from the cup, connect hermetically mouthpiece of hose with vacuum-cleaning hose.

13 - MAINTENANCE OF EQUIPMENT IN THE WINTER

WARNING! To make correct MAINTENANCE OF EQUIPMENT IN THE WINTER, contact your local representative.

WARNING! All electrical work must be performed by a qualified person in compliance with the enclosed instructions.
If your filtration unit operated in a region where there is a risk of low temperatures, we recommend you to complete conservation for WINTERIZING (if the water freezes inside the filter, some parts of the filtration equipment can be damaged).

For this purpose you should switch off the differential switch in the electrical control panel for the whole conservation period. Shut off the water supply line to the pool and make sure it does not contain water. Drain the water from the basin to a level of 1m from the top edge of the pool.
In the technical compartment in the multiconductor connection box disconnect the electric motor wires. Unscrew the nut joining the pump and remove the pump from the technical part. Ensure that after draining the water from the pump, it was kept in a dry place. Turbine pump must be rotated manually 2-3 times during the winter.
Upon completion of the work do not forget to close the lid of filtration equipment and lock screws.

14 - Technical Support Center

If you have questions or suggestions, or need additional technical information, please contact technical support at:

e-mail: info@vsv-group.com

If you want to get information about other product of VSV Aqua Group, instructions for their use and installation, we invite you to visit us at INTERNET: www.vsv-group.com.

COPYRIGHT
VSV Aqua Group reserves the right without notice to make changes to this manual, related to the improvement of equipment, and in case of inaccuracies and typographical errors. All these changes will be incorporated into new editions of this manual. You should visit our page on the Internet: www.vsv-group.com to obtain updated information and new developments.
VSV Aqua Group has full rights to patents, patent applications, trademarks, copyrights and other intellectual property associated with the content of this guide. This manual does not give you any license or other legal rights to the use of the above without the express written permission of VSV Aqua Group.

CE declaration of conformity is issued in compliance with the 89/336/EEC rule of electromagnetic compatibility and with 73/23/EEC rule of safety requirements for electric equipment.